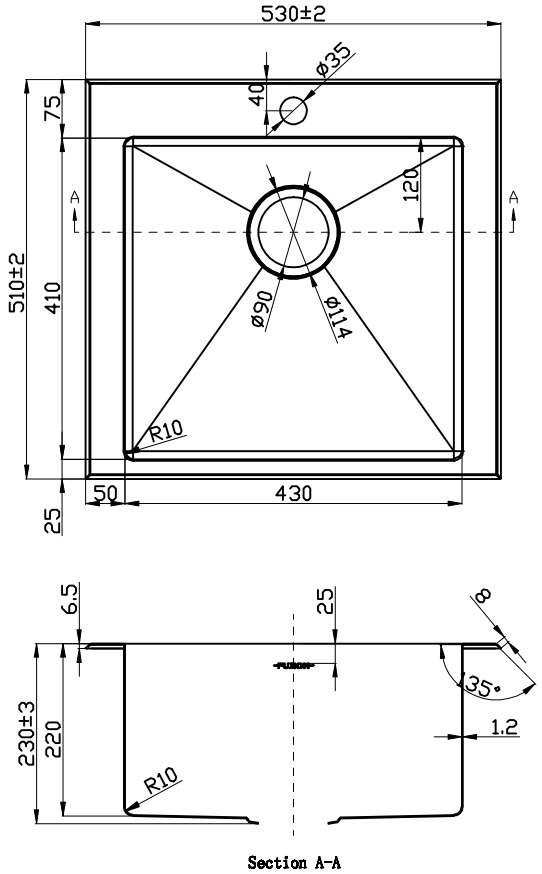

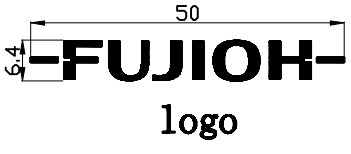

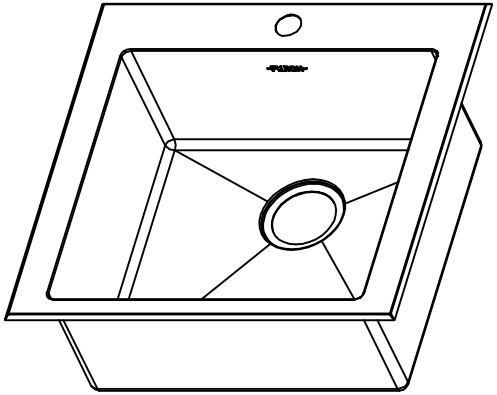

Draw		Material	SUS304	Name	Stainless Steel Sink			
Sales		Finish		Iitem No				
Check		Customer		Customer Item	FZ-SN50-S43T			
Approval				Time	20201014			
				Proportion		Page No	1-1	Edition: