FUJIOH

INDUCTION HOB/ **FH-ID51/52**

Boost Mode (ID5120, ID5230) | Power Setting | Pan Sensor (ID5125, ID5230) | Foreign Body Detection | Residual Heat Indicator | Touch Switch | Auto Switch Off | Child Safety Lock | Timer

1 YEAR INDUCTION HOB LIMITED WARRANTY*

Harmony between aesthetics and function
美しさと、機能性の融合。

Make your cooker hob part of your kitchen aesthetics–functional when you need it, and simply an extension of the counter top when you don't.

Our state-of-the-art ceramic induction hobs are exceptionally durable and feature quality glass by SCHOTT. The smooth surface makes cleaning up a breeze, and safety features ensure you know when the surface is hot. We think you'll love the bevelled edges we added for the ultimate statement of style.

ADVANCED FUNCTIONS

01/ SCHOTT CERAN® Glass

Ceramic glass for easy care and durability

02/ Boost Mode

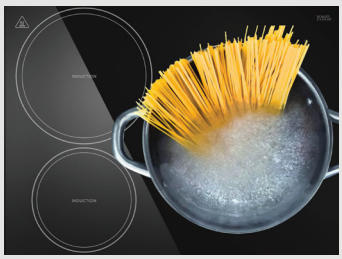

Accelerated maximum power for quick cooking

03/ Safety Features

Safety and convenience at the touch of your fingertips

*Warranty Terms and Conditions apply

FUJIOH

MODELS

FH-ID5125

FH-ID5120

FH-ID5230

INSTALLATIONS

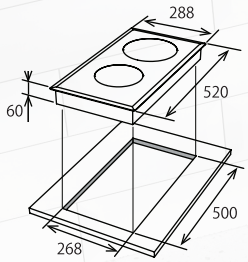

FH-ID5125 [mm]

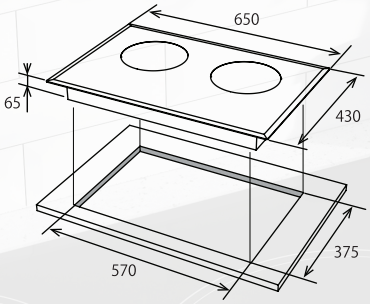

FH-ID5120 [mm]

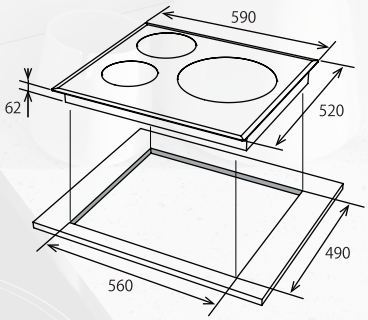

FH-ID5230 [mm]

SPECIFICATIONS

Model		FH-ID5125	FH-ID5120	FH-ID5230
Type		IH Domino 2 zones	IH Horizontal 2 zones	IH Horizontal 3 zones
Dimensions [mm]		W288 x D520 x H60	W650 x D430 x H65	W590 x D520 x H62
Cut-out size [mm]		W268 x D500	W570 x D375	W560 x D490
Weight [kg]		5.2	5.9	8.7
Voltage [V/Hz]		220, 230, 240/50		
Power [kW]	Individual	Front: 1.5 Rear: 2.0	Left: 1.5 (Boost 2.0) Right: 1.5 (Boost 2.0)	Left Front: 1.3 (Boost 1.5) Left Rear: 2.3 (Boost 2.6) Right: 2.6 (Boost 3.0)
	Total	3.5	Max 3.5	Max 6.6
Ampere required [A] (Based on 230V)		15	15	30
Zone Size [mm]		Front: 150 Rear: 180	Left: 190 Right: 190	Left Front: 160 Left Rear: 210 Right: 290
Boost		No	Yes	Yes
Switch		Touch Switch		
Timer		99 mins	180 mins	99 mins
Power Setting		9 steps	8 steps	9 steps
Child Safety Lock		Yes		
Residual Heat Indicator		Yes		
Auto Switch Off		Yes		
Pan Sensor		Yes	No	Yes
Material		SCHOTT CERAN® Ceramic Glass		
Color		Black		

FUJIOH INTERNATIONAL TRADING PTE. LTD.
3014A Ubi Road 1 #06-04 Singapore 408703

For enquiries, email fit@fujioh.com.sg | Telephone +65 6286 3286
Fax +65 6285 3285 | Service Hotline +65 6286 2284

FUJIOHSG FUJIOHSG www.fujioh.com/sg global.fujioh.com